TELECRANE®
REMOTE CONTROL
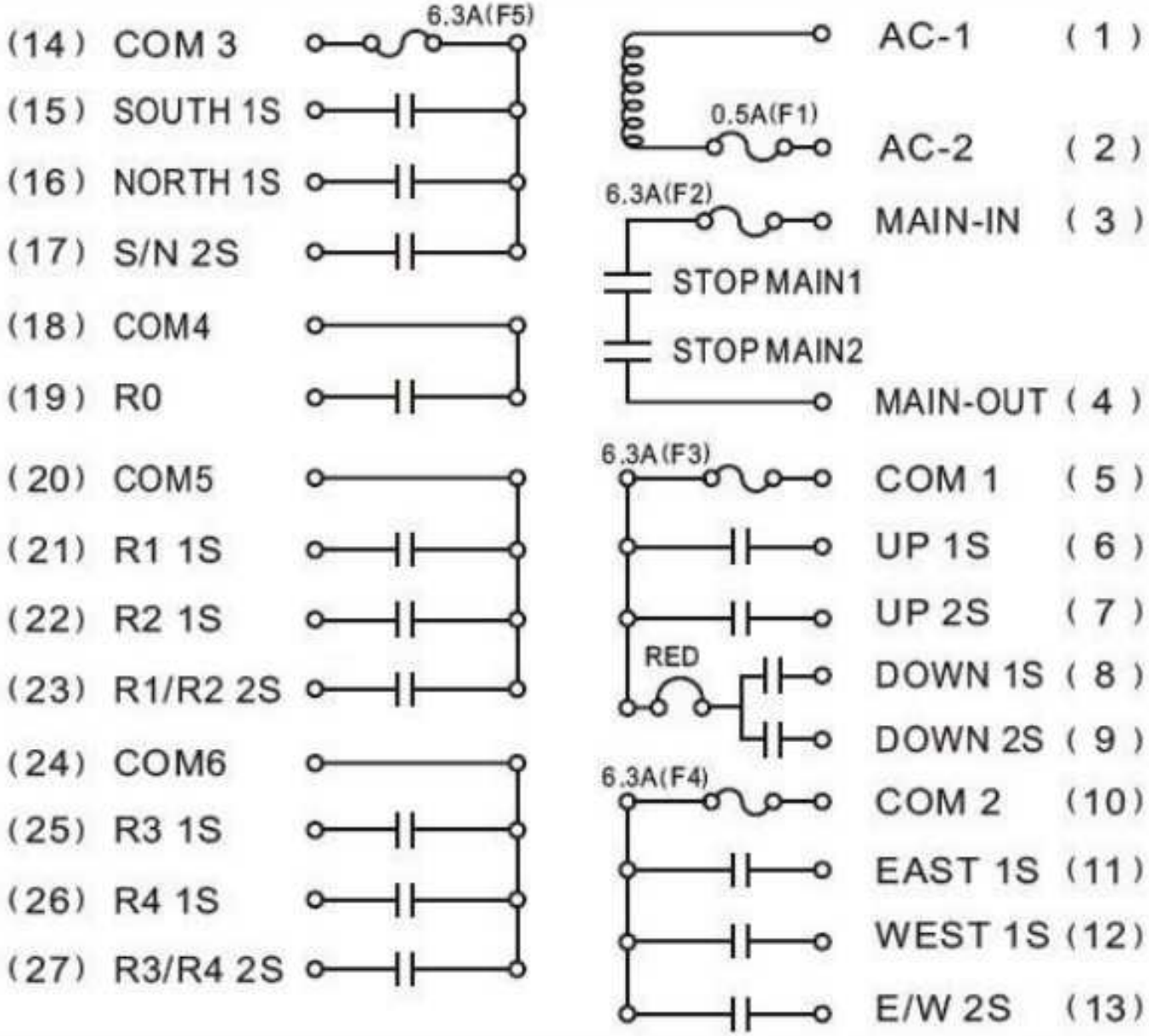
MODEL NO.: F25
S/N: **CH:**